REVISIONS				
ZONE	REV.	DESCRIPTION	DATE	APPROVED
	1	changed measurement from decimal to fraction	12/14/5	VP

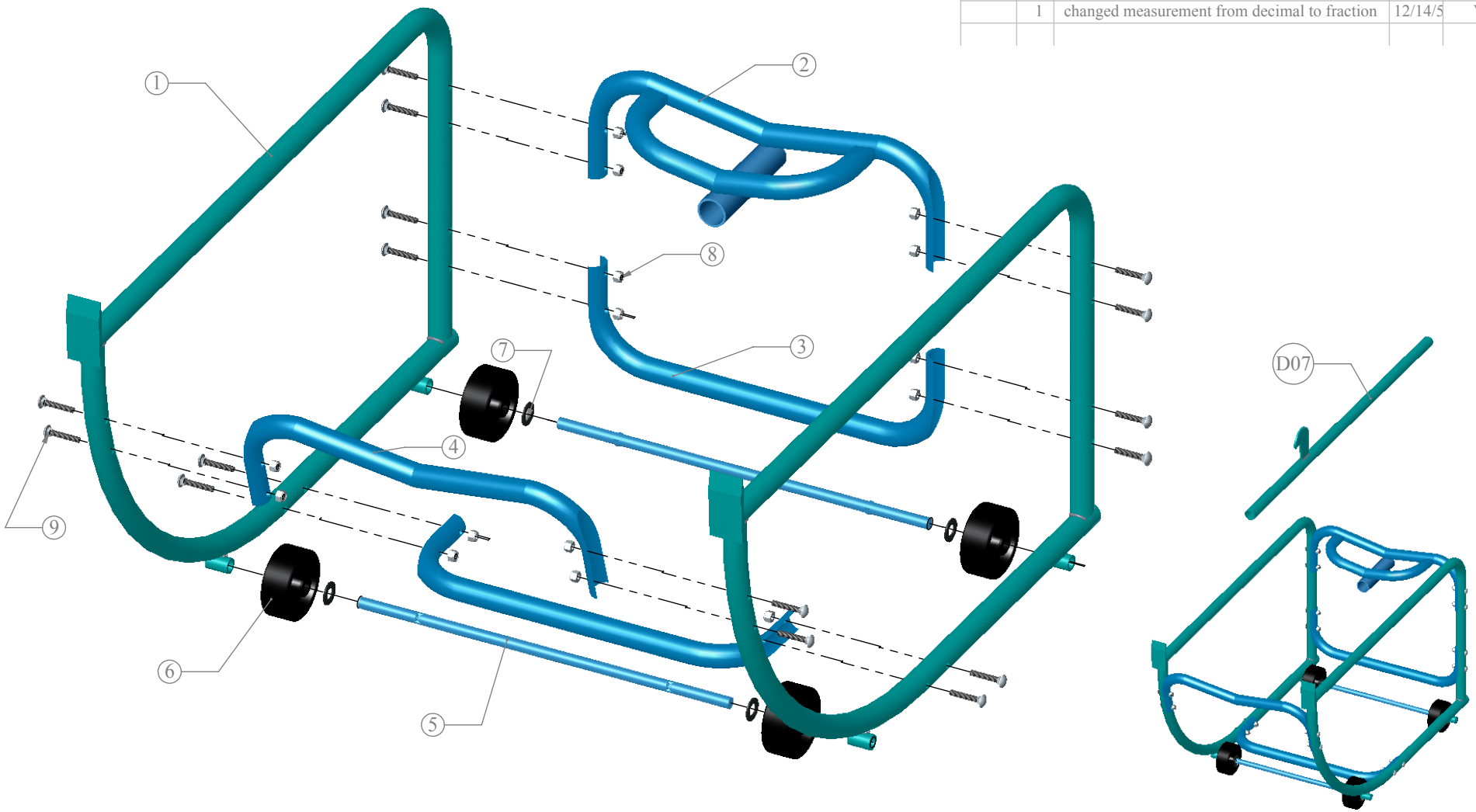

ITEM NO.	PART NUMBER	QTY.
1	D01	2
2	D04	1
3	D02	2
4	D03	1
5	D06	2
6	3 inch wheel (AW135)	4
7	Washer to suit	4
8	1/4" nylock 1	16
9	1/4" x 1 3/8" carriage bolt 1	16

PROPRIETARY AND CONFIDENTIAL

THE INFORMATION CONTAINED IN THIS DRAWING IS THE SOLE PROPERTY OF Unitran Manufacturers Ltd. ANY REPRODUCTION IN PART OR AS A WHOLE WITHOUT THE WRITTEN PERMISSION OF Unitran Manufacturers Ltd. IS PROHIBITED.

DIMENSIONS ARE IN INCHES
TOLERANCES:
FRACTIONAL ± 1/32"
ANGULAR: MACH ± .5 BEND ± .5
TWO PLACE DECIMAL ± .010
THREE PLACE DECIMAL ± .005
UNLESS OTHERWISE STATED

MATERIAL

DO NOT SCALE DRAWING

	NAME	DATE
DRAWN	Dean S.	9/3/4
CHECKED	VP	5/3/16
ENG APPR.		
MFG APPR.	VP	5/3/16

COMMENTS:

Unitran Manufacturers

3014 Assembly

DWG. NO. U-0176 REV. 1

SCALE: WEIGHT: SHEET 1 OF 1